Current part is item (2) on diagram. Available at www.oshkoshequipment.com

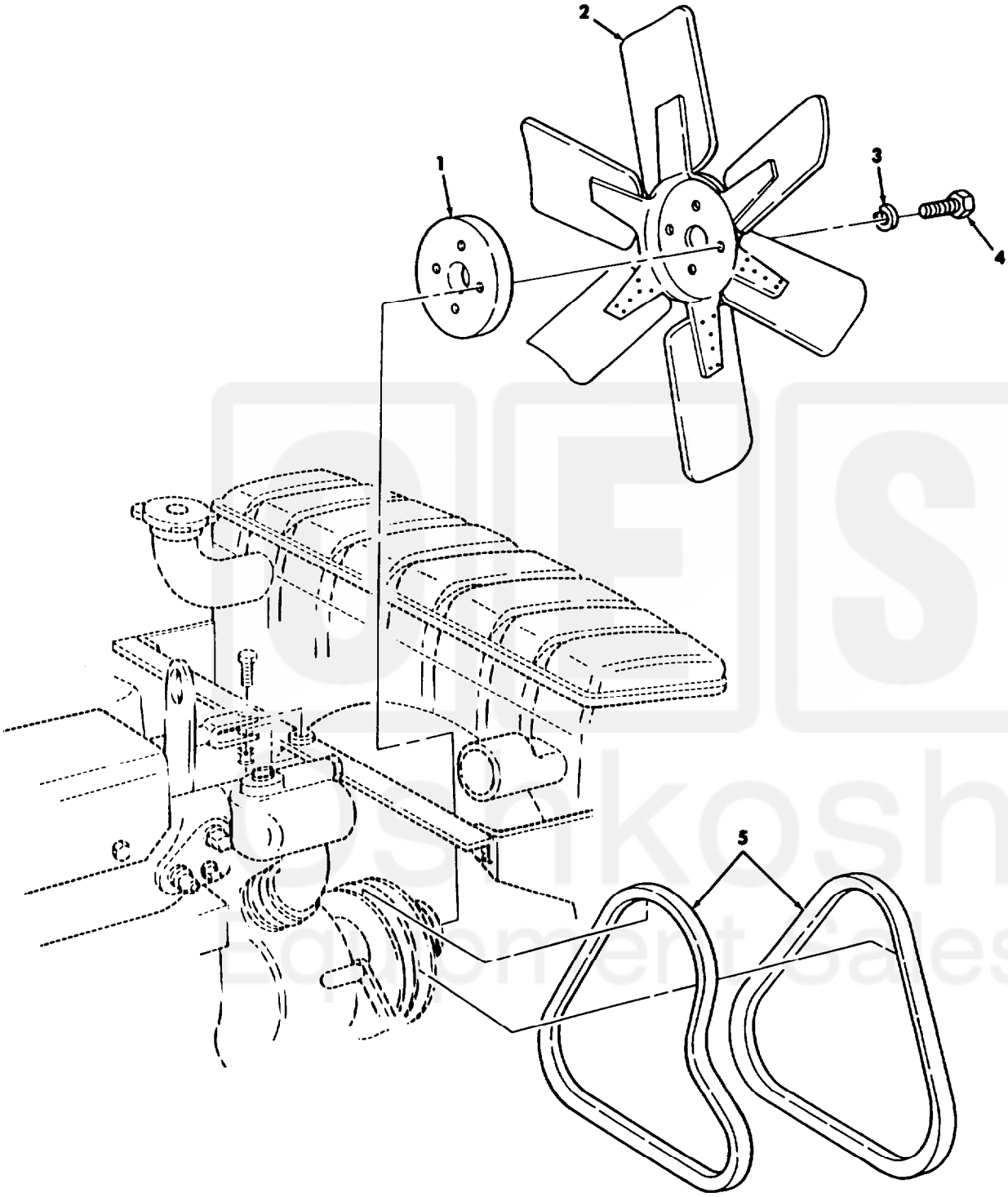

Figure 30. Engine Fan Drive and Related Parts.

Current part is item (2) on diagram. Available at www.oshkoshequipment.com

Current part is item (2) on diagram. Available at www.oshkoshequipment.com

(1) ITEM NO	(2) SMR CODE	(3) NSN	(4) CAGEC	(5) PART NUMBER	(6) DESCRIPTION AND USABLE ON CODES(UOC)	(7) QTY
					GROUP 0505 FAN ASSEMBLY	
					FIG. 30 ENGINE FAN DRIVE AND RELATED PARTS	
1	PAOZZ	5365004435262	19207	11641748	SPACE,PLATE LDS465-1A ENGINES UOC:251,268,269,270,271,273,274,275, 276,277,278,279,281,287,587	1
2	PAOZZ	2930001130768	19207	11641747	IMPELLER,FAN,AXIAL	1
3	PAOZZ	5310009594679	96906	MS35340-45	WASHER,LOCK	4
4	PAOZZ	5306000179819	35761	AVYBC1-3PC15	BOLT,MACHINE	4
5	PAOZZ	3030008340507	96906	MS51066RP47-2	BELTS,V,MATCHED SET	1

END OF FIGURE

Current part is item (2) on diagram. Available at www.oshkoshequipment.com